This project has been funded with the support from the European Commission. This communication reflects the views only of the author, and the Commission cannot be held responsible for any use which may be made of the information contained therein.

505313-LLLP-1-2009-1-IT-KA2-KA2MP

CLIL Unit (1)

Unit title: Forces applications

Partner: I.I.S. 'Faravelli', Stradella- Sez. Liceo scientifico C:Golgi Broni
Teachers : *Laura Smeraldi(Physics) and Alessandra Brigada(English language*)

Topic: Forces- definitions and applications

Subject area: Physics-English

Language: English

Language Level: B1

Target students: 3^C Scientific Lyceum -2nd half of the school year

Aims:

- **skills:** development of the abilities of listening, reading, writing and speaking related to the knowledge of basic elements regarding forces and equilibrium in the dynamics field: ability to define the concepts concerning components of forces (compositions, torque, equilibrium of a particle and of a rigid body); ability to solve easy problems , to read physics formulae, short scientific texts , to analyse information for operative purposes and to understand scientific videos .

Knowledge: notion of force and forces applied to particles and rigid bodies.

Final product:a written classwork and a listening comprehension related to a video about physics.
Compilation of a glossary of scientific specific terms.

Methodology, classroom activities:

Teacher's speech; individual activities and/or group work, you-tube teaching videos.

Assessment tools: exercises, listening tests, multimedial files, intermediate and final class tests (including listening comprehension through you-tube teaching videos .

Evaluation criteria:

for language: accuracy, correctness, richness in vocabulary, knowledge of grammar, learning of specific scientific terms, expositive effectiveness.;

for content: knowledge of given topics, ability to work out concepts and rework formulae, problem solving.

Documents and materials:

Topics of the Physics teacher's lessons

Introduction

Watching a power point presentation

Definitions of :

<u>Concurrent Force Systems</u>:

A concurrent force system contains forces whose lines-of action meet at some one point. Forces may be ***tensile (pulling)***

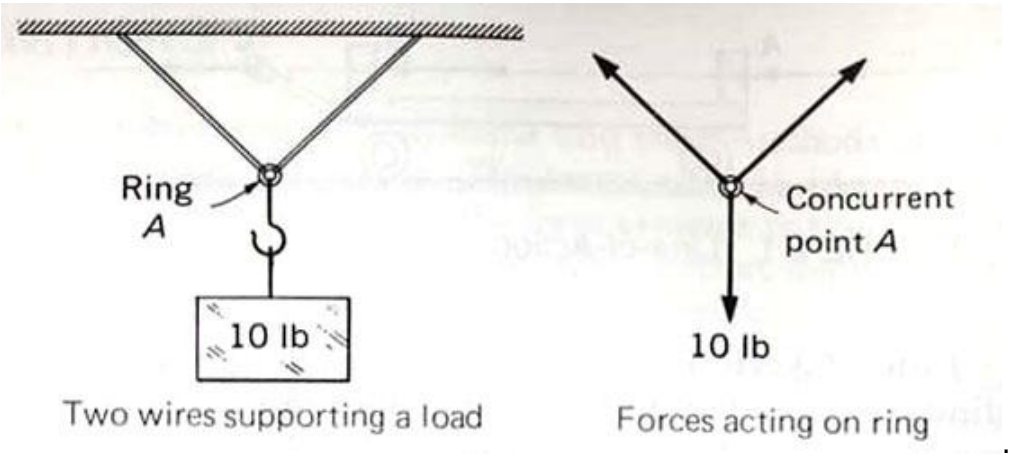

Forces may be ***compressive (pushing)***

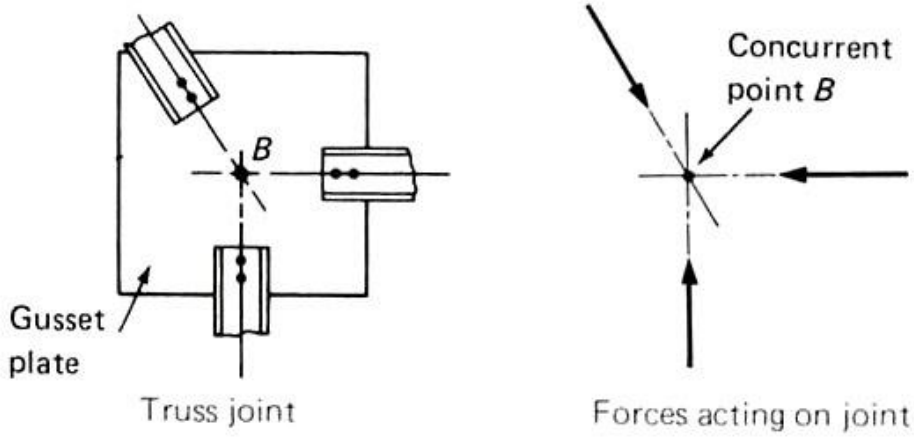

Force ***exerted on a body*** has two effects:

- The ***external effect***, which is tendency to change the motion of the body or to develop resisting forces in the body
- The ***internal effect***, which is the tendency to deform the body.

If ***the force system acting on a body*** produces ***no external effect***, the forces are said to be in ***balance*** and the body, which experiences no change in motion, is said to be in ***equilibrium***.
The process of reducing a force system to a simpler equivalent system is called a ***reduction.*** The process of expanding a force or a force system into a less simple equivalent system is called a ***resolution.***

Forces and their Characteristics

A ***force*** is a vector quantity that, when applied to some rigid bodies, has a tendency to produce translation (movement in a straight line) or translation and rotation of a body. When problems are given, a force may also be referred to as a load or weight. Characteristics of force are the ***magnitude***, ***direction*** (orientation) and ***point of application***.
Scalar Quantity has ***magnitude only*** (not direction) and can be indicated by a point on a scale. Examples are ***temperature, mass, time and dollars.***
Vector Quantities have ***magnitude and direction***. Examples are ***wind velocity***, ***distance*** between to points on a map and ***forces.***

Collinear : If several forces lie along the same line-of action, they are said to be ***collinear.***
Coplanar When all forces acting on a body are in the same plane, the forces are ***coplanar.***

Type of Vectors

Free Vector - is a vector which may be freely moved creating couples in space.
Sliding Vector - forces action on a rigid body are represented by vectors which may move or slid along their line of action.
Bound Vector or Fixed Vector - can not be moved without modifying the conditions of the problem.

Principle of Transmissibility

The principle of transmissibility states that the condition of equilibrium or of motion of a rigid body will remain unchanged if a ***force F*** action at a given point of the rigid body is replaced by a ***force F'*** of the same magnitude and the same direction, but acting at a different point, provided that the two forces have the same line of action.

Line of action

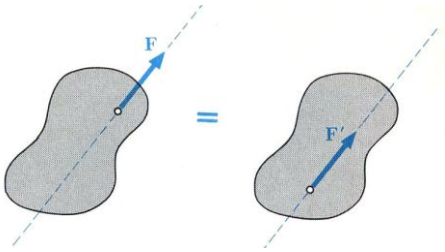

Types of Forces(Loads)

1. ***Point loads*** - concentrated forces exerted at point or location
2. ***Distributed loads*** - a force applied along a length or over an area. The distribution can be uniform or non-uniform.

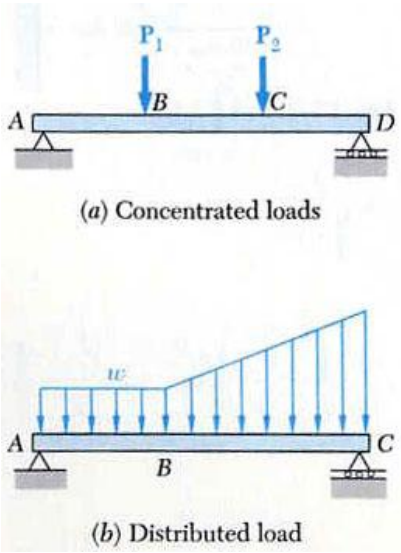

Resultant of three or more concurrent Forces

Resultant Forces

If two forces ***P*** and ***Q*** act on a particle A may be replaced by a single force ***R***, which has the same effect on the particle.

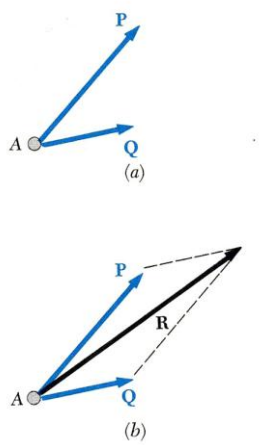

This force is called the resultant of the forces **P** and **Q** and may be obtained by constructing a parallelogram, using **P** and **Q** as two sides of the parallelogram. ***The diagonal that pass through A*** represents the resultant.

This is known as the ***parallelogram law*** for the addition of two forces. This law is based on experimental evidence; it can not be proved or derived mathematically.

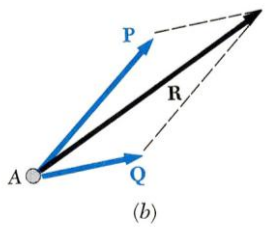

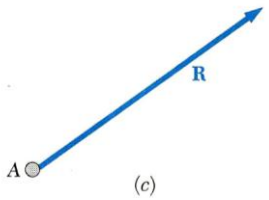

At this point the students will be asked to go to the physics lab to prove this experiment with the tools at their disposal.

For multiple forces action on a point, the forces can be broken into the ***components of x and y.***

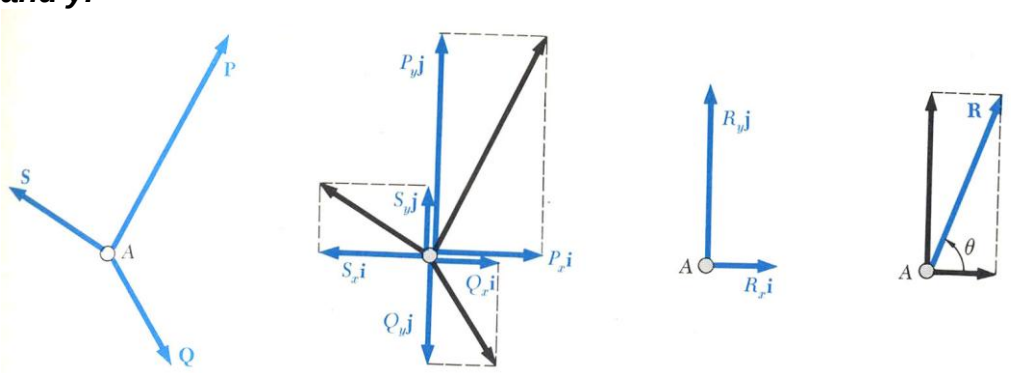

Vectors

The vectors can be solved by

1. Law of ***sines*** and law of ***cosines*** (two forces)
2. Graphically
3. Equilibrium
    a) Table
    b) Sum of values

Torque

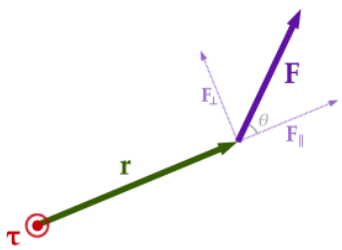

Torque is defined about a point not specifically about axis .

A particle is located at position **r** relative to its axis of rotation. When a force **F** is applied to the particle, only the perpendicular component **F** produces a torque. This torque (tau)**τ**=**r**×**F** has magnitude τ = |**r**||**F**| = |**r**||**F**|sinθ and is directed outward from the page. The SI unit for the torque is newton metre.

A force applied at a right angle to a lever multiplied by its distance from the lever's fulcrum (the length of the lever arm) is its ***torque.*** A force of three newtons applied two metres from the fulcrum, for example, exerts the same torque as a force of one newton applied six metres from the fulcrum. The direction of the torque can be determined by using the right hand grip rule: if the fingers of the right hand curl in the direction of rotation and the thumb points along the axis of rotation, then the thumb also points in the direction of the torque.[5]

More generally, the torque on a particle (which has the position **r** in some reference frame) can be defined as the cross product:

$$\boldsymbol{\tau} = \mathbf{r} \times \mathbf{F},$$

where **r** is the particle's position vector relative to the fulcrum, and **F** is the force acting on the particle. The magnitude τ of the torque is given by

$$\tau = rF\sin\theta,$$

where r is the distance from the axis of rotation to the particle, F is the magnitude of the force applied, and θ is the angle between the position and force vectors.

COUPLE

The simplest kind of couple consists of two equal and opposite forces whose lines of action do not coincide. This is called a "simple couple". The forces have a turning effect or moment called a torque about an axis which is normal to the plane of the forces. The SI unit for the torque of the couple is newton metre.

If the two forces are **F** and **−F**, then the magnitude of the torque is given by the following formula:

$$\tau = F \times d$$

where

> **T** is the torque
> F is the magnitude of one of the forces
> d is the perpendicular distance between the forces, sometimes called the *arm* of the couple

The magnitude of the torque is always equal to Fd, with the direction of the torque given by the unit vector $\hat{e}$, which is perpendicular to the plane containing the two forces.

The moment of a force is only defined with respect to a certain point *P* (it is said to be the "moment about *P*"), and in general when *P* is changed, the moment changes. However, the moment (torque) of a *couple* is *independent* of the reference point *P*: Any point will give the same moment. In other words, a torque vector, unlike any other moment vector, is a "free vector".

STATIC EQUILIBRIUM

Statics is the branch of mechanics that deals with the equilibrium of bodies.

A standard definition of **static equilibrium** is:

> a system of particles is in static equilibrium when all the particles of the system are at rest and the total force on each particle is permanently zero.

This is a strict definition, and often the term "static equilibrium" is used in a more relaxed manner interchangeably with "mechanical equilibrium", as defined next.

A standard definition of **mechanical equilibrium** for a particle is:

> the necessary and sufficient conditions for a particle to be in mechanical equilibrium is that the net force acting upon the particle is zero.

The necessary conditions for **mechanical equilibrium** for a system of particles are:

> (i)The vector sum of all *external forces* is zero;
> (ii) The sum of the moments of all *external forces* about any line is zero.

As applied to a rigid body, the necessary and sufficient conditions become:

> A rigid body is in mechanical equilibrium when the sum of all forces on all particles of the system is zero (translation equilibrium), and also the sum of all torques relative to any point on all particles of the system is zero. (rotational equilibrium)

Example problems for an intermediate test

1.
Determine the magnitude and direction of the resultant of the two forces.

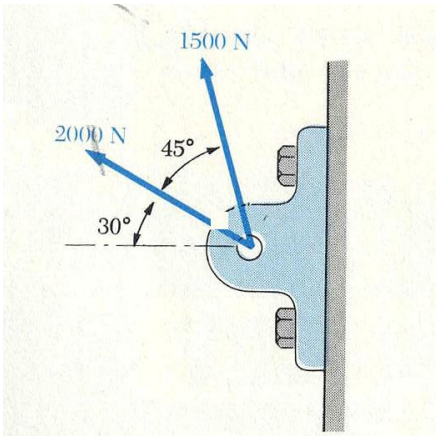

2.
Two structural members B and C are riveted to the bracket A. Knowing that the tension in member B is ***6 kN*** and the tension in C is ***10 kN***, determine the ***magnitude*** and ***direction*** of the resultant force acting on the bracket.

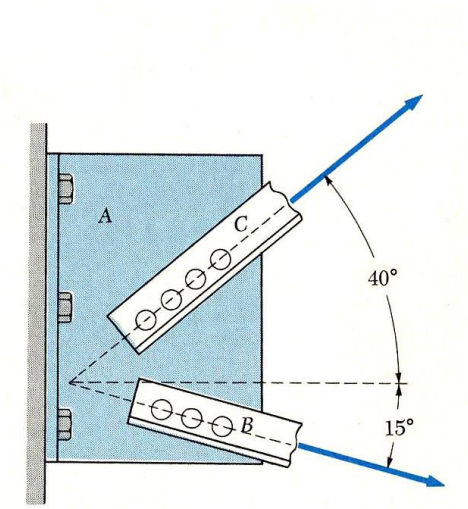

3. Determine the magnitude and direction of **P** so that the resultant of **P** and the ***900-N*** force is a vertical force of ***2700-N*** directed downward.

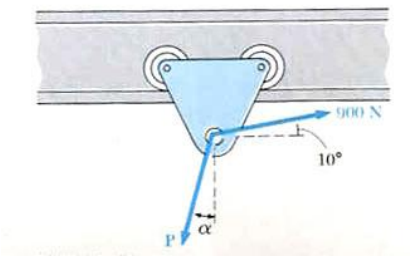

4. A cylinder is to be lifted by two cables. Knowing that the tension in one cable is ***600 N***, determine the magnitude and direction of the force so that the resultant of the vertical force is of ***900 N.***

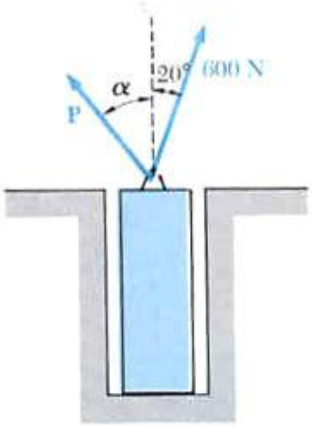

5. Determine the force in each supporting wire.

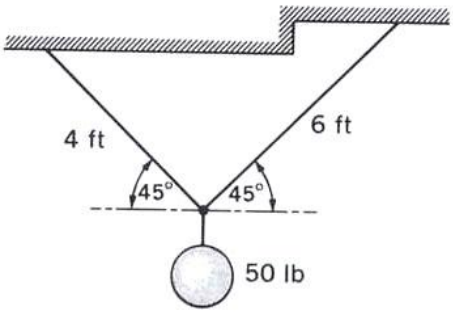

6. The stoplight is supported by two wires. The light weighs 75-lb and the wires make an angle of **10°** with the horizontal. What is the force in each wire?

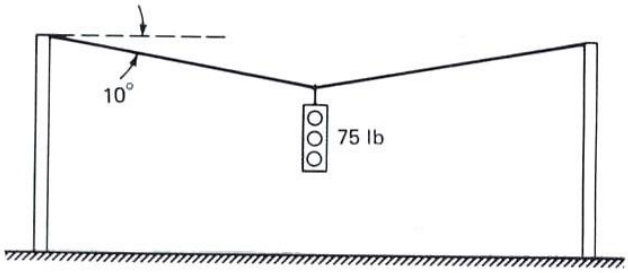

7.The *barge B* is pulled by **two tugboats A and C.** At a given instant the tension in ***cable AB*** is 4500-lb and the tension in ***cable BC*** is 2000-lb. Determine the magnitude and direction of the resultant of the two forces applied at ***B*** at that instant

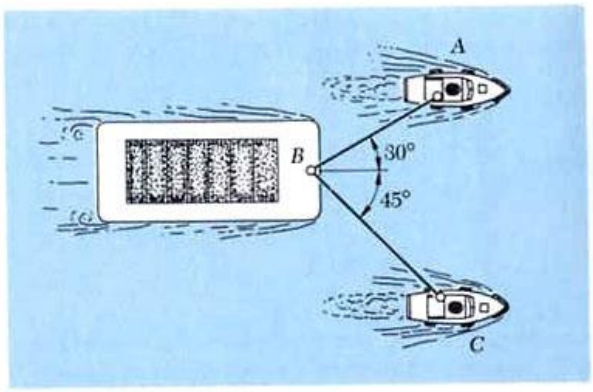

8.Determine the resultant of the forces on ***the bolt.***

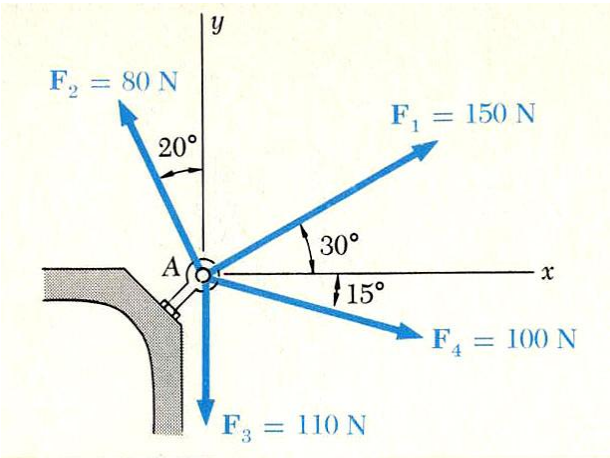

.9 For each of the four cases below, calculate the total torque respect to the centre of the beam 2b long and the resultant of the forces represented in the picture below and determine if the body is resting or it isn't.

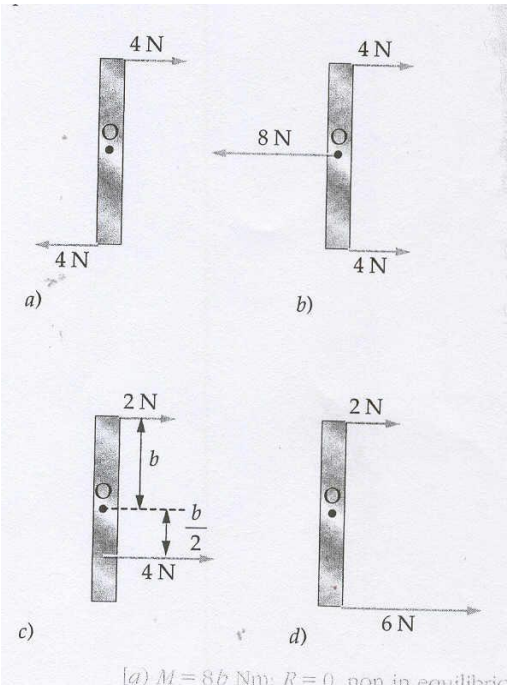

10.Two parallel forces with the same sense have magnitude of 20 N. and 30 N. The distance from the line of action of the resultant to the larger force is 0,8 m. Find the distances between the forces.

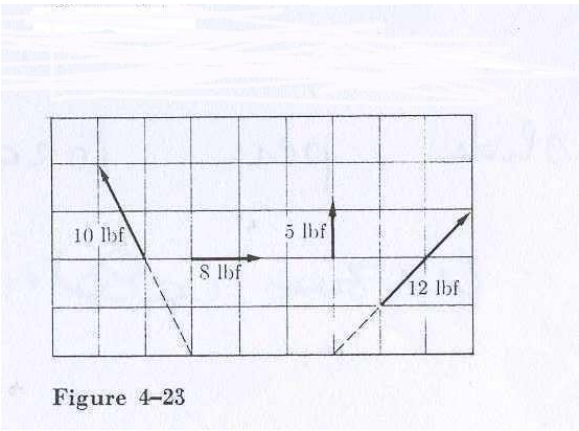

Figure 4–23

The following exercises can be part of a final test:

11. Determine which set of force system is in equilibrium. For those force systems that are not in equilibrium, determine the balancing force required to place the body in equilibrium.

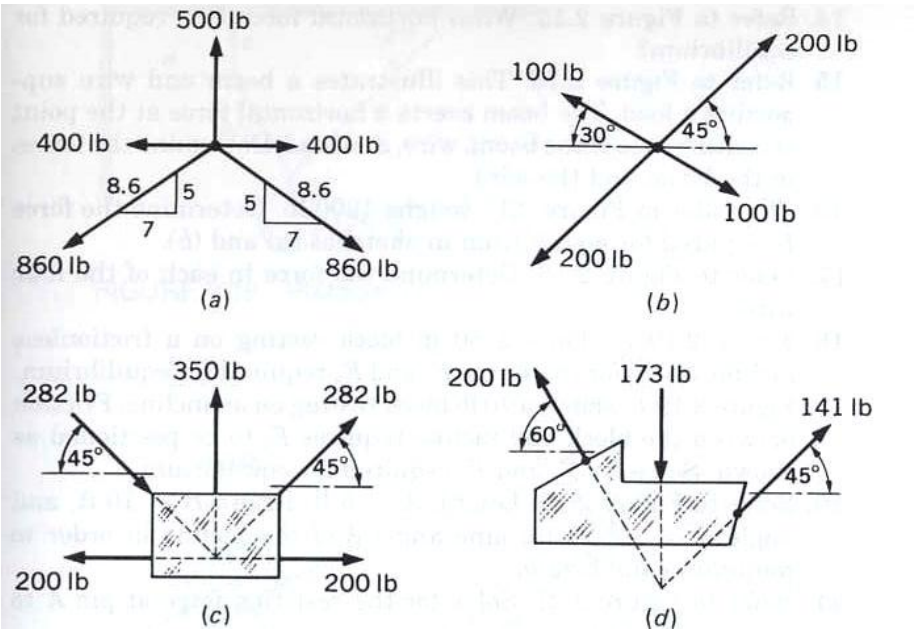

12.Two forces **P** and **Q** of magnitude ***P=1000-lb*** and ***Q=1200-lb*** are applied to the aircraft connection. Knowing that the connection is in equilibrium, determine the tensions **T1** and **T2.**

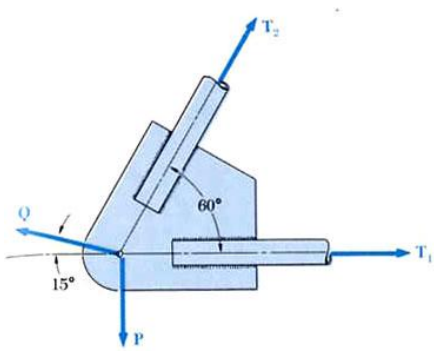

13.The blocks are at rest on a frictionless incline. Solve for the **forces F1** and **F2** required for equilibrium.

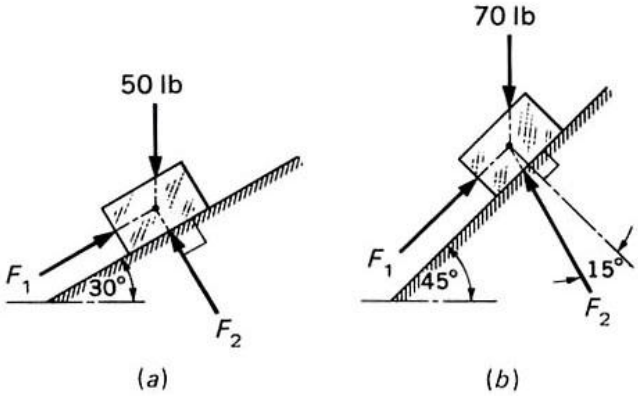

14. The beam AB is uniform and has a mass of 100 Kg. It is resting on his ends A and B and is supporting the masses, as shown in Fig.4-27.Calculate the reactions at the supports

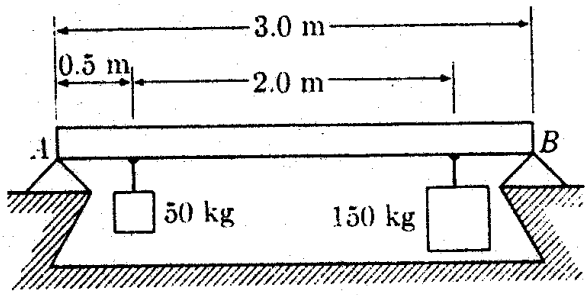

Figure 4–27

Language awareness

At the end of each Physics lessons the students are asked to do some linguistic exercises with focus ***on specific words and structures*** correlated with the topics presented, underlying , in particular the different meaning a word may assume in different specific contexts.

Types of exercises:

- ***Linguistic***

Match the words with the Italian equivalents
Complete the sentences with the correct lexical items

- ***Comprehension***

True/ false
Multiple choice questions
Open questions

- ***Listening***

Watching teaching You-tube videos asking the students to insert the missing words in the unfilled scripts.
http://fisica.decapoa.altervista.org/fisica/index.php?&id=222

As a feedback at the end of each lesson students are invited to fill in a type of ***board diary*** in which they must specify the topics presented, the information acquired, the difficulties they faced and some possible suggestions.
The scientific specific terms encountered durig each lesson will be collected in a glossary with their precise definition. At the end the glossary will be useful for students of other classes too.

Broni 20 ottobre 2010

Le docenti di
Fisica: Laura Smeraldi
Lingua Inglese: Alessandra Brigada