This project has been funded with the support from the European Commission. This communication reflects the views only of the author, and the Commission cannot be held responsible for any use which may be made of the information contained therein.

505313-LLLP-1-2009-1-IT-KA2-KA2MP

UNIT 3

(4 hours)

Laboratory activities about the 2nd Newton's Law

The purpose of this experiment is to test whether Force = Mass x Acceleration. You will use he weight of a small mass, m, to provide the force that accelerates a system consisting of a large mass, M, the glider (air cart) + the aluminum "flag," and the small mass, m. If friction can be neglected,

$(M + m)\, a = mg$

and

$a = (mg)/(M + m)$.

This is the sketch of the instruments we will use

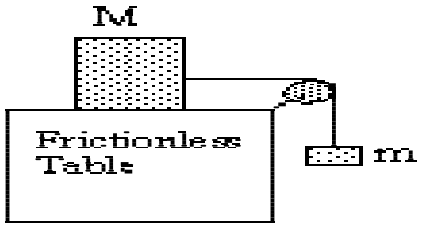

And here you are a more complete

description

3. *The Characteristics, Construction, Matching*

The track is the main body of the Air Track and is made of high alloy aluminum. It is light and of high mechanical efficiency. The specially designed constructions make it strong and never deforms for over a long time, guarantee the straightness by precision-processing before being manufactured out of the factory.

The blocked boards at the both ends of the track can be removed so as to clean the inside of the track.

The Photogate is fixed on the both side so that students can observe the experiment easily, as shown as Fig 1.

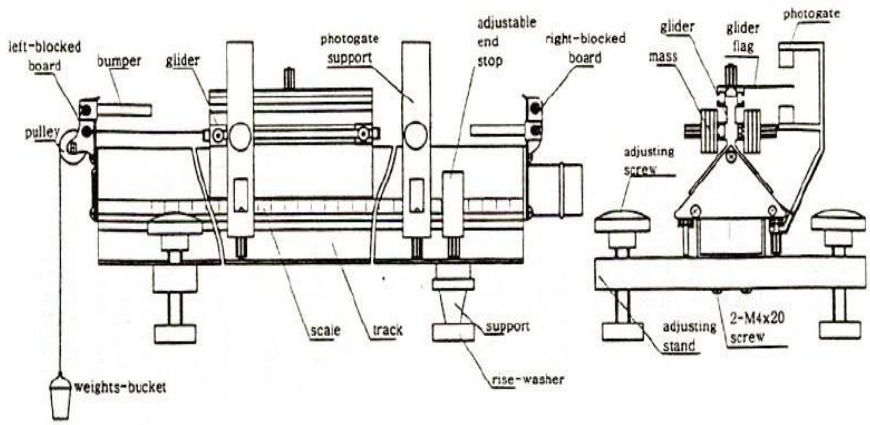

You will measure m, M and to see if the measured acceleration is really given by the above equation, does

$$a_{measured} = a_{theory}$$

where the theoretical value is given by the equation above, using the measured masses and g = 9.80 m/s^2.

You will measure the acceleration, a, by recording the time the flag passes the sensors on the air track, the distance between those points and computing the velocity and then the acceleration of the cart.

EXPERIMENT

How do you measure a? You will measure a by measuring the displacement of the cart between the photo gate.

There are two gates or sensors that tell when the flag on the cart passes them. The timer will start when the glider passes through the first sensor and will stop when the glider passes through the second sensor.

1. Measure the mass of the glider M, the weight with its weight basket (including the basket) m
2. Measure the separation between the two sensors, and call it S.
3. Take notes of the time

You know exactly which type of motion the glider moves, in fact it is uniform accelerated with initial velocity equals to 0.
In this case you can calculate the acceleration by using

$S = \frac{1}{2} \cdot a \cdot T^2$ and so $a = 2\,S / T^2$
And we call it a measured.

Then we can calculate the acceleration by using the 2nd Newton's Law
a = (mg)/(M + m).

It will be useful to make this simple grid with any data:

"Pulling mass" m [Kg]	**Displacement [m]**	**Time [sec]**	**a measured [m/s^2]**	**a calculated [m/s^2]**

We will make several measurements, changing the mass m and the displacement S.

If the second Newton's Law works, you will be able to verify, within the accuracy of the instruments and measurement, that the two accelerations will be the same.

Exercise

At the end of the laboratory activities students will be asked to write down a laboratory report with this content:

1. A description, with a simple sketch, of the instruments.
2. The physics law
3. A description on how the experience has been conducted
4. A conclusion and some comments about the laboratory activities.